HWA1-A 02106÷04349

Air-Cooled liquid chiller for outdoor installation

106 kW÷349 kW

The high efficiency air-cooled chillers and heat pumps of the HWA1-A and HWA1-A / H series are designed for outdoor installation, available in 24 sizes, 12 chillers and 12 heat pumps, so as to satisfy all system requirements in commercial, residential and industrial buildings.

These are units made for cooling and heating water, very versatile and characterized by the possibility of complete and simple maintenance management.

Made in Italy | R410A | PLATE HEAT EXCHANGER | SCROLL | V.415

EUROVENT CERTIFIED PERFORMANCE

Fitted accessories

2SFV	Double security valve with changeover valve
BT	BT version for low water temperatures
C	Ducted version
CC	Condensation control up to -20°C
CM	Modbus communication module
CT	Condensation control up to -10°C
DS	Chiller with desuperheater
EC	EC fan (included in versions C, BT, SSL)
GR1	Cooling circuit anti-intrusion grid
GR2	Condenser anti-intrusion grid
GR3	Condenser and circuit anti-intrusion grid
IM	Magnethermic switch for compressors and fans
KS	Hoist ring kit
LQ	Electrical board lighting
PD	Standard double pump
PD/SI	Double standard pump+tank
PDAP	High pressure double pump
PDAP/SI	Double high pressure pump+tank
PS	Standard pressure pump
PS/SI	Standard pressure pump+tank
PSAP	High pressure pump
PSAP/SI	High pressure pump+tank
RFM	Suction and discharge ball valve for compressors
SAS	Remote probe
SH	Schuko plug (with magnetothermal switch)
SL	Silenced version
SS	Soft starter
SSL	Super silenced version
TE1	Special pump gasket seal for glycol concentration over 40%
TR1	Micro-channel coil with Aero surface treatment

Loose accessories

AG	Anti-vibration rubber mounts
AM	Anti-vibration spring mounts
FY	Y-strainer
Hi-TV415	Hi-touch controller
i-CR	Remote wall controller
e-Lite	Multifunctional remote control system
ISK	Serial converter USB/RS485 (ISK)
RV	Starting kit made by 2 grooved couplers and 2 straight starting pipes
SAS	Remote probe

Standard

Remote probe enabling

Enable 2nd set point

Versions

HWA1-A Standard version chiller

You can choose an acoustic configuration from the following:

/SL	Silenced version
/SSL	Super silenced version
/C	Ductable version

There are different types of hydronic kits to be combined with the chiller: with single/double pump standard/high pressure, with or without tank:

/PS	Standard pressure pump
/PSAP	High pressure pump
PD	Double standard pressure pump
PDAP	High pressure double pump
PS/SI	Standard pressure pump + tank
PSAP/SI	High pressure pump + tank
PD/SI	Double standard pressure pump + tank
PDAP/SI	Double high pressure pump + tank

Carpentry
Suitable for outdoor installation, consisting of thick profiles in hot galvanized steel sheet or painted with RAL 7035 polyester powder resistant to atmospheric agents.

Source (side) heat exchanger air
Full-aluminium coil microchannel type. Coil structure made with an open-angle V-geometry layout.

Compressor
Hermetic scroll complete with internal thermal protection.
The compressor is isolated from the structure by interposition of special rubber mountings. The mobile spiral is driven by an electric motor 2-pole (2900 rpm) cooled by the inlet refrigerant, the starter is directed. All compressors have full charge of oil polyester, suitable for use with refrigerant R410A. An electrical heater, located on the crankcase, is automatically activated when the unit is switch off in order to prevent the mixing of oil in the refrigerant. The control of cooling power is achieved through steps of parzialization in number equal to the number of compressors installed. When connecting in tandem there is an oil equalizing line with a level indicator.

User (side) heat exchanger
AISI 304 steel braze-welded plate exchanger, insulated with Black closed-cell flexible elastomeric foam (FEF) coupled with a 3 mm layer of reticulated foam in PE and an exterior embossed finishing PE film in aluminium in colour; total thickness 6+3 mm, thermal conductivity (λ)≤ 0,034 W/m·K.
A differential pressure switch, mounted on the water side, safeguard the flow rate and prevent ice from forming inside the evaporator.
Maximum operating pressure exchanger: 15 bar on the water side and 45 bar on the refrigerant side

Fan section
Ventilation system composed by 800mm axial electric fans, protected to IP54, with external rotor and plastic-coated aluminium blades. Housed in aerodynamic hoods complete with safety grille. Brushless electronically commutated electrical motor and incorporated thermal protection.Continuous adjustment of fan rotation speed.

Refrigerant circuit
One or two independent refrigeration circuits made of copper, brazed and factory-assembled, complete with:

- Anti-acid dehydrator filter with solid cartridge,100% molecular sieve solid core from 3Å, particularly suitable for HFC and POE, PAG oil;
- Liquid flow and moisture indicator;
- Low and high pressure transducer;
- Electronic expansion valve;
- Low and high pressure safety pressure switch;
- Low and high pressure safety valve;
- Shut-off valve on liquid line;
- Service valves

Electrical panel
It is completely manufactured and wired in accordance with EN 60204.
The power supply section includes:
- General door lock switch, with bars for main power supply (400Vac/3ph+PE/50Hz);
- Isolating transformer for the auxiliary power supply circuit (400Vac/230Vac-12Vac);
- Compressor and fan protection fuses;
- Power supply contactor with thermal protection for compressor control;
- Phase control relay with minimum / maximum voltage intervention calibration
- Thermostated ventilation inside the electrical panel

The control section includes:
- Interface terminal with alphanumeric display;
- Displaying function of setting values, of analog inputs, error codes, alarm history and parameter index;
- Forced circulation function in case of frost risk;
- Keys for on/off switching and reset of alarms;
- Keys combination to constrain the defrosting process and constraining the pump at maximum rpm (if present);
- Remote/Local power on/off management of the unit;
- Digital input for the machine power ON/OFF;
- Analog input for enabling remote plant temperature sensor;
- Digital input for double set point enablement;
- Digital input for Summer/Winter mode activation (heat pump only);
- BMS connectivity predisposition (Modbus / Bacnet / Knx / Lonworks)
- Thermoregulation and timing of the compressors;
- Fan motors speed regulation in evaporation/condensation;
- Dynamic set point management.

HWA1-A		02106	02120	02128	02140	04155	04177	04184	04209	04239	04258	04305	04349
Cooling													
Cooling capacity (1)	kW	105	119	130	139	155	176	182	208	238	257	305	348
Power input (1)	kW	33,5	38,3	44,2	44,3	49,9	56,7	62,9	67,1	76,8	88,5	98,3	112
EER (1)	W/W	3,13	3,10	2,93	3,15	3,11	3,10	2,90	3,10	3,10	2,90	3,10	3,10
Cooling capacity (2)	kW	139	155	164	185	204	230	239	277	314	333	405	458
Power input (2)	kW	35,7	40,8	46,8	47,5	52,9	60,9	67,8	71,6	81,9	94,6	105	121
EER (2)	W/W	3,88	3,79	3,50	3,89	3,87	3,77	3,52	3,87	3,84	3,52	3,85	3,78
SEER (3)	W/W	4,13	4,12	4,11	4,27	4,11	4,11	4,10	4,14	4,24	4,10	4,16	4,12
Cooling capacity (8)	kW	61,9	70,6	77,8	82,0	91,5	103	109	123	144	158	184	211
Power input (8)	kW	29,9	34,1	39,3	39,5	45,4	50,8	55,8	59,7	68,8	79,4	88,5	101
EER (8)	W/W	2,07	2,07	1,98	2,08	2,02	2,04	1,95	2,06	2,09	1,99	2,08	2,10
Water flow (1)	L/s	5,0	5,7	6,2	6,5	7,2	8,4	8,7	9,9	11,4	12,3	14,7	16,6
Pressure drop (1)	kPa	36,9	44,7	28,0	47,7	43,7	40,3	46,4	24,9	43,7	32,7	44,2	53,1
Compressor													
Type		Scroll											
Compressors	n°	2	2	2	2	4	4	4	4	4	4	4	4
Refrigerant circuits	n°	1	1	1	1	2	2	2	2	2	2	2	2
Refrigerant charge-Circuit 1 (4)	kg	10,5	10,5	10,5	15,0	13,0	13,0	13,0	13,0	13,5	13,5	19,5	20,0
Refrigerant charge-Circuit 2 (4)	kg	-	-	-	-	10,5	10,5	10,5	13,0	13,5	13,5	19,5	20,5
Fans													
Nominal air flow	l/s	10614	10714	11143	14649	14467	15868	15892	20647	20471	22231	29279	33255
Fan numbers	n°	2	2	2	3	3	3	3	4	4	4	6	6
Hydraulic circuit													
Max pressure hydronic kit	bar	6	6	6	6	6	6	6	6	6	6	6	6
Min. water volume (5)	L	427	535	535	699	409	533	533	533	669	669	874	874
Tank volume	L	390	390	390	705	420	420	420	520	520	520	705	705
Sound level													
Sound power (6)	dB(A)	86 std/ 85 SL/ 83 SSL	86 std/ 85 SL/ 83 SSL	87 std/ 86 SL/ 84 SSL	87 std/ 86 SL/ 84 SSL	87 std/ 86 SL/ 84 SSL	88 std/ 87 SL/ 85 SSL	88 std/ 87 SL/ 85 SSL	88 std/ 87 SL/ 85 SSL	88 std/ 87 SL/ 85 SSL	88 std/ 87 SL/ 85 SSL	88 std/ 87 SL/ 85 SSL	90 std/ 89 SL/ 87 SSL
Sound pressure (7)	dB(A)	54 std/ 53 SL/ 51 SSL	54 std/ 53 SL/ 51 SSL	55 std/ 54 SL/ 52 SSL	54,9 std/ 53,9 SL/ 51,9 SSL	54,9 std/ 53,9 SL/ 51,9 SSL	55,9 std/ 54,9 SL/ 52,9 SSL	55,9 std/ 54,9 SL/ 52,9 SSL	55,9 std/ 54,9 SL/ 52,9 SSL	55,9 std/ 54,9 SL/ 52,9 SSL	55,9 std/ 54,9 SL/ 52,9 SSL	55,8 std/ 54,8 SL/ 52,8 SSL	57,8 std/ 56,8 SL/ 54,8 SSL
Electrical data													
Power supply		400Vac/3P+PE/50Hz											
Max. power input	kW	48,9	55,0	61,1	66,9	82,4	87,4	90,9	97,8	110,0	122,3	146,0	165,8
Max. current input	A	83,0	93,4	103,8	113,5	139,9	148,3	154,3	166,0	186,8	207,6	247,8	281,4
Weight													
Gross weight (9)	kg	1.080	1.080	1.090	1.510	1.620	1.620	1.620	1.950	1.960	1.960	2.670	2.850
Operation weight (9)	kg	1.090	1.090	1.100	1.520	1.630	1.630	1.630	1.960	1.970	1.980	2.690	2.870

Data referred to the following condition:
(1) Cooling: outdoor air temperature 35°C; water temperature inlet/outlet 12/7°C.
(2) Cooling: outdoor air temperature 35°C; water temperature inlet/outlet 23/18°C.
(3) Internal exchanger water reference temperature = 12/7 ° C.
(4) Indicative data and subject to change. For the correct data, always refer to the technical label on the unit.
(5) The calculated value of minimum volume of water at the plant does not consider the volume of water contained in the internal exchanger (evaporator). With low external air temperature applications or low average loads required, the minimum volume of water to the system is obtained by doubling the indicated value.
(6) Condition (1); value determined on the basis of measurements carried out in accordance with the UNI EN ISO 9614-2 standard, in compliance with the requirements of the Eurovent certification.
(7) Value calculated from the sound power level using ISO 3744: 2010, referred to 10 m distance from the unit.
(8) Cooling version BT: outdoor air temperature 35 ° C, internal exchanger water temperature = -3 / -8 ° C. Fluid treated with 35% ethylene glycol.
(9) Weight referred to the standard version without hydronic kit and possible accessories.
N.B. The performance data are indicative and could be subject to change. In addition, the performances declared in apex (1), (2), and (8) refer to the instantaneous power according to EN 14511. The declared data stated in the apex (6) is determined according to the UNI EN 14825.

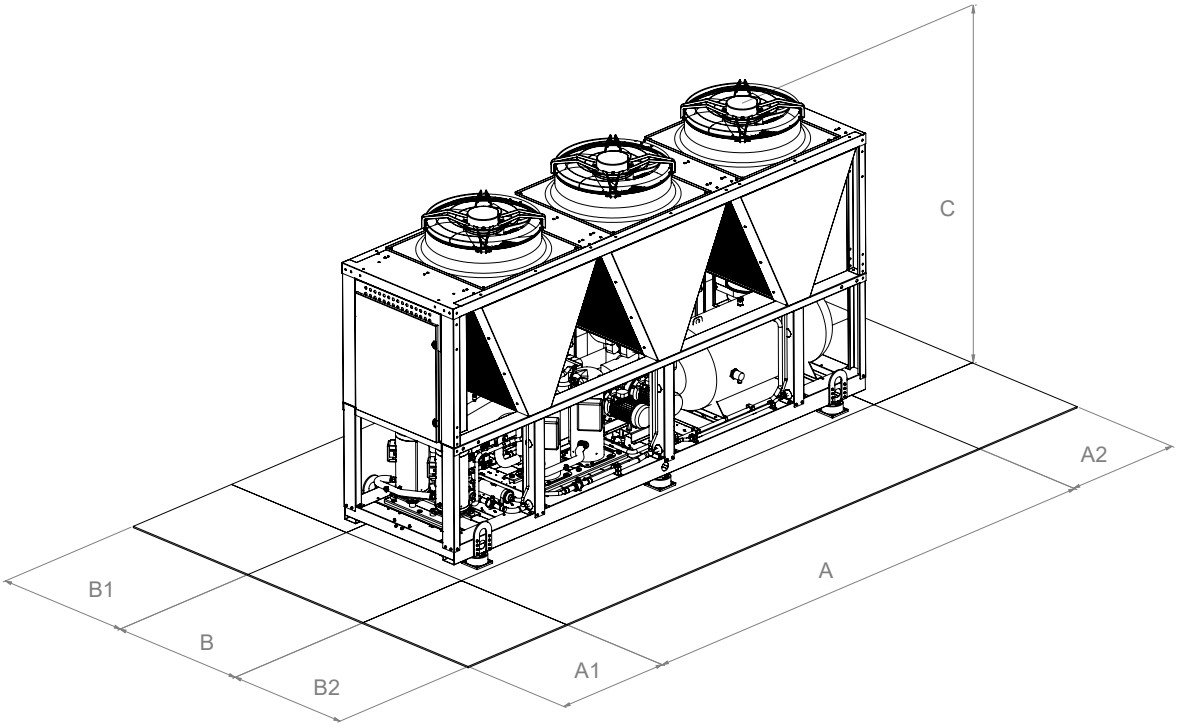

Model	Size			Clearance recommended access				Heat exchanger	
	A [mm]	B [mm]	C [mm]	A1[mm]	A2 [mm]	B1 [mm]	B2 [mm]	Type	Ø
02106	2860	1100	2350	1000	800	1000	1000	Victaulic	DN65 (2" 1/2)
02120	2860	1100	2350	1000	800	1000	1000	Victaulic	DN65 (2" 1/2)
02128	2860	1100	2350	1000	800	1000	1000	Victaulic	DN65 (2" 1/2)
02140	4060	1100	2350	1000	800	1000	1000	Victaulic	DN65 (2" 1/2)
04155	4060	1100	2350	1000	800	1000	1000	Victaulic	DN80 (3")
04177	4060	1100	2350	1000	800	1000	1000	Victaulic	DN80 (3")
04184	4060	1100	2350	1000	800	1000	1000	Victaulic	DN80 (3")
04209	2860	2200	2350	1000	800	1000	1000	Victaulic	DN80 (3")
04239	2860	2200	2350	1000	800	1000	1000	Victaulic	DN80 (3")
04258	2860	2200	2350	1000	800	1000	1000	Victaulic	DN80 (3")
04305	4060	2200	2350	1000	800	1000	1000	Victaulic	DN80 (3")
04349	4060	2200	2350	1000	800	1000	1000	Victaulic	DN80 (3")

* Depends on the hydronic version - check the technical bulletin

HWA1-A/H 02109÷04345

Air-Cooled reversible heat pump for outdoor installation

109 kW÷345 kW

The high efficiency air-cooled chillers and heat pumps of the HWA1-A and HWA1-A / H series are designed for outdoor installation, available in 24 sizes, 12 chillers and 12 heat pumps, so as to satisfy all system requirements in commercial, residential and industrial buildings.

Made in Italy | R410A | PLATE HEAT EXCHANGER | SCROLL | V.415

EUROVENT CERTIFIED PERFORMANCE

Fitted accessories

2SFV	Double security valve with changeover valve
BT	BT version for low water temperatures
ACK6	Segnalazione Summer/Winter
C	Ducted version
CC	Condensation control up to -20°C
CM	Modbus communication module
CT	Condensation control up to -10°C
DS	Chiller with desuperheater
EC	EC fan (included in versions C, BT, SSL)
GR1	Cooling circuit anti-intrusion grid
GR2	Condenser anti-intrusion grid
GR3	Condenser and circuit anti-intrusion grid
IM	Magnethermic switch for compressors and fans
KA1	Heat exchanger + pump (if on board) electrical heaters
KA2	Heat exchanger + pump (if on board) + inertial tank electrical heaters
KS	Hoist ring kit
LQ	Electrical board lighting
PD	Standard double pump
PD/SI	Double standard pump+tank
PDAP	High pressure double pump
PDAP/SI	Double high pressure pump+tank
PS	Standard pressure pump
PS/SI	Standard pressure pump+tank
PSAP	High pressure pump
PSAP/SI	High pressure pump+tank
RFM	Suction and discharge ball valve for compressors
SAS	Remote probe
SH	Schuko plug (with magnetothermal switch)
SL	Silenced version
SS	Soft starter
SSL	Super silenced version
TE1	Special pump gasket seal for glycol concentration over 40%
TR2	Al/Cu battery with anti-corrosion Silver Line treatment

Loose accessories

AG	Anti-vibration rubber mounts
AM	Anti-vibration spring mounts
FY	Y-strainer
Hi-TV415	Hi-touch controller
i-CR	Remote wall controller
e-Lite	Multifunctional remote control system
ISK	Serial converter USB/RS485 (ISK)
RV	Starting kit made by 2 grooved couplers and 2 straight starting pipes
SAS	Remote probe

Standard

Remote probe enabling

Enable 2nd set point

Versioni

HWA1-A/H Standard version chiller

You can choose an acoustic configuration from the following:

/SL	Silenced version
/SSL	Super silenced version
/C	Ductable version

There are different types of hydronic kits to be combined with the reversible heat pump: with single/double pump standard/ high pressure, with or without tank:

/PS	Standard pressure pump
/PSAP	High pressure pump
/PD	Double standard pressure pump
/PDAP	High pressure double pump
/PS/SI	Standard pressure pump + tank
/PSAP/SI	High pressure pump + tank
/PD/SI	Double standard pressure pump + tank
/PDAP/SI	Double high pressure pump + tank

Compressor
Hermetic scroll complete with internal thermal protection. The compressor is isolated from the structure by interposition of special rubber mountings. The mobile spiral is driven by an electric motor 2-pole (2900 rpm) cooled by the inlet refrigerant, the starter is directed. All compressors have full charge of oil polyester, suitable for use with refrigerant R410A. An electrical heater, located on the crankcase, is automatically activated when the unit is switch off in order to prevent the mixing of oil in the refrigerant. The control of cooling power is achieved through steps of parzialization in number equal to the number of compressors installed. When connecting in tandem there is an oil equalizing line with a level indicator.

User (side) heat exchanger
AISI 304 steel braze-welded plate exchanger, insulated with Black closed-cell flexible elastomeric foam (FEF) coupled with a 3 mm layer of reticulated foam in PE and an exterior embossed finishing PE film in aluminium in colour; total thickness 6+3 mm, thermal conductivity (λ) ≤ 0,034 W/m·K.
A differential pressure switch, mounted on the water side, safeguard the flow rate and prevent ice from forming inside the evaporator.
Maximum operating pressure exchanger: 15 bar on the water side and 45 bar on the refrigerant side.

Carpentry
Suitable for outdoor installation, consisting of thick profiles in hot galvanized steel sheet or painted with RAL 7035 polyester powder resistant to atmospheric agents.

Source (side) heat exchanger air
Finned exchanger, made from copper pipes arranged in staggered rows and mechanically expanded for better adherence to the collar of the fins. The fins are made of aluminium with a special corrugated surface, set a suitable distance apart to ensure maximum heat exchange efficiency. A proper liquid supply of the expansion valve is ensured by the subcooling circuit. Each finned heat exchanger is directly cooled by the air flow of its specific fans.

Fan section
Ventilation system composed of axial fans with 800mm diameter, with IP54 protection degree, with external rotor, with high aerodynamic efficiency aluminum blades with winglet profile (possibly covered with plastic material), housed in aerodynamic profile mouthpieces, complete with safety protection net. Brushless electric motor with electronic switching and built-in thermal protection. Continuous regulation of the fan rotation speed.

Refrigerant circuit
One or two independent refrigeration circuits made of copper, brazed and factory-assembled, complete with:

- Anti-acid dehydrator filter with solid cartridge;
- Liquid flow and moisture indicator;
- Low and high pressure transducer;
- Electronic expansion valve;
- Check valves;
- 4-Way reversing valve;
- Liquid receiver;
- Suction separator;
- Low and high pressure safety pressure switch;
- Low and high pressure safety valve;
- Shut-off valve on liquid line;
- Service valves

Electrical panel
- It is completely manufactured and wired in accordance with EN 60204.
- The power supply section includes:
- General door lock switch, with bars for main power supply (400Vac/3ph+PE/50Hz);
- Isolating transformer for the auxiliary power supply circuit (400Vac/230Vac-12Vac);
- Compressor and fan protection fuses;
- Power supply contactor with thermal protection for compressor control;
- Phase control relay with minimum / maximum voltage intervention calibration
- Thermostated ventilation inside the electrical panel

The control section includes:
- Interface terminal with alphanumeric display;
- Displaying function of setting values, of analog inputs, error codes, alarm history and parameter index;
- Water side protection of antifreeze pump (if present and on heat pump models);
- Keys for on/off switching and reset of alarms;
- Keys combination to constrain the defrosting process and constraining the pump at maximum rpm (if present);
- Remote/Local power on/off management of the unit;
- Digital input for the machine power ON/OFF;
- Analog input for enabling remote plant temperature sensor;
- Digital input for double set point enablement;
- Digital input for Summer/Winter mode activation (heat pump only);
- BMS connectivity predisposition (Modbus / Bacnet / Knx / Lonworks)
- Thermoregulation and timing of the compressors;
- Fan motors speed regulation in evaporation/condensation;
- Dynamic set point management.

HWA1-A/H		02109	02121	02142	02148	02160	04176	04199	04215	04237	04273	04304	04345
Cooling													
Cooling capacity (1)	kW	103	113	132	138	148	165	187	208	225	260	289	325
Power input (1)	kW	33,8	38,9	41,3	44,4	49,8	52,6	59,4	67,2	77,5	80,6	92,9	112
EER (1)	W/W	3,05	2,90	3,19	3,11	2,97	3,14	3,15	3,10	2,90	3,22	3,10	2,90
Cooling capacity (2)	kW	139	151	177	188	202	224	252	282	301	351	388	434
Power input (2)	kW	36,5	42,7	44,1	47,7	53,0	55,7	63,8	71,6	83,2	87,0	101	122
EER (2)	W/W	3,81	3,53	4,01	3,94	3,82	4,01	3,95	3,94	3,62	4,04	3,86	3,56
SEER (5)	W/W	4,35	4,36	4,38	4,73	4,50	4,61	4,64	4,71	4,53	4,65	4,73	4,42
Water flow (1)	L/s	4,9	5,4	6,3	6,6	7,1	7,9	8,9	10,0	10,8	12,4	13,8	15,5
Pressure drop (1)	kPa	21,7	20,1	26,5	24,3	20,2	21,7	26,5	24,7	27,2	18,8	24,9	17,9
Heating													
Heating capacity (3)	kW	113	125	148	154	166	188	207	223	246	286	316	356
Power input (3)	kW	27,6	30,9	36,6	37,7	41,4	46,0	50,7	54,8	61,1	69,2	78,3	88,5
COP (3)	W/W	4,09	4,05	4,04	4,08	4,01	4,08	4,09	4,07	4,02	4,13	4,04	4,02
Heating capacity (4)	kW	108	120	142	148	160	179	198	214	237	273	303	344
Power input (4)	kW	32,9	37,5	43,9	45,3	49,4	55,9	61,5	66,0	74,0	83,8	94,7	108
COP (4)	W/W	3,30	3,20	3,22	3,26	3,23	3,21	3,22	3,24	3,20	3,26	3,20	3,20
SCOP (6)	W/W	3,72	3,77	3,62	3,69	3,68	3,90	3,84	3,96	4,00	3,92	3,95	4,01
Water flow (4)	l/s	5,2	5,8	6,8	7,0	7,7	8,6	9,5	10,3	11,4	13,1	14,6	16,6
Use side heat exchanger load losses (4)	kPa	24,2	22,9	30,6	28,4	24,0	26,6	31,9	27,6	30,5	22,9	29,1	22,3
Energy efficiency (Water 35°C-55°C)		A+/A+	A+/A+	A+/A+	A+/A+	A+/A+	A++/A+	A++/A+	A++/A+	A++/A+	A++/A+	A++/A+	A++/A+
Compressor													
Type		Scroll											
Compressors	n°	2	2	2	2	2	4	4	4	4	4	4	4
Refrigerant circuits	n°	1	1	1	1	1	2	2	2	2	2	2	2
Refrigerant charge-Circuit 1 (7)	kg	26,5	27,0	34,5	42,0	40,0	22,0	18,0	25,5	28,5	43,0	47,0	50,0
Refrigerant charge-Circuit 2 (7)	kg	-	-	-	-	-	22,0	18,0	24,0	28,5	36,0	34,0	30,0
Fans													
Nominal air flow	l/s	10021	9984	15109	15088	15045	20954	20888	20815	20738	31370	31264	31109
Fan numbers	n°	2	2	3	3	3	4	4	4	4	6	6	6
Hydraulic circuit													
Max pressure hydronic kit	bar	6	6	6	6	6	6	6	6	6	6	6	6
Min. water volume (8)	L	490	630	630	820	820	480	610	610	780	1.020	1.020	1.290
Tank volume	L	390	390	705	705	705	520	520	520	520	705	705	705
Sound level													
Sound power (9)	dB(A)	88 std/ 87 SL/ 84 SSL	88 std/ 87 SL/ 84 SSL	88 std/ 87 SL/ 84 SSL	88 std/ 87 SL/ 84 SSL	88 std/ 87 SL/ 84 SSL	89 std/ 88 SL/ 85 SSL	89 std/ 88 SL/ 85 SSL	89 std/ 88 SL/ 85 SSL	90 std/ 89 SL/ 86 SSL	90 std/ 89 SL/ 86 SSL	91 std/ 90 SL/ 87 SSL	92 std/ 91 SL/ 88 SSL
Sound pressure (10)	dB(A)	56 std/ 55 SL/ 52 SSL	56 std/ 55 SL/ 52 SSL	55,9 std/ 54,9 SL/ 51,9 SSL	55,9 std/ 54,9 SL/ 51,9 SSL	55,9 std/ 54,9 SL/ 51,9 SSL	56,9 std/ 55,9 SL/ 52,9 SSL	56,9 std/ 55,9 SL/ 52,9 SSL	56,9 std/ 55,9 SL/ 52,9 SSL	57,9 std/ 56,9 SL/ 53,9 SSL	57,8 std/ 56,9 SL/ 53,9 SSL	58,8 std/ 57,8 SL/ 54,8 SSL	59,8 std/ 58,8 SL/ 55,8 SSL
Electrical data													
Power supply		400Vac/3P+PE/50Hz											
Max. power input	kW	48,9	55,0	63,1	66,9	73,0	87,9	92,8	97,8	110,0	123,8	139,8	160,1
Max. current input	A	83,0	93,4	107,1	113,5	123,9	149,2	157,6	166,0	186,8	210,2	237,4	271,8
Weight													
Gross weight (11)	kg	1.180	1.210	1.470	1.530	1.530	2.030	2.060	2.100	2.130	2.680	2.880	2.900
Operation weight (11)	kg	1.190	1.220	1.480	1.540	1.540	2.040	2.070	2.110	2.140	2.700	2.900	2.930

Data referred to the following condition:
(1) Cooling: outdoor air temperature 35°C; water temperature inlet/outlet 12/7°C.
(2) Cooling: outdoor air temperature 35°C; water temperature inlet/outlet 23/18°C.
(3) Heating: outdoor air temperature 7°C d.b. 6°C w.b.; water temperature inlet/outlet 30/35°C.
(4) Heating: outdoor air temperature 7°C d.b. 6°C w.b.; water temperature inlet/outlet 40/45°C.
(5) Internal exchanger water reference temperature = 12/7 ° C.
(6) Indicative data and subject to change. For the correct data, always refer to the technical label on the unit.
(7) The calculated value of minimum volume of water at the plant does not consider the volume of water contained in the internal exchanger (evaporator). With low external air temperature applications or low average loads required, the minimum volume of water to the system is obtained by doubling the indicated value.
(8) Condition (1); value determined on the basis of measurements carried out in accordance with the UNI EN ISO 9614-2 standard, in compliance with the requirements of the Eurovent certification.
(9) Value calculated from the sound power level using ISO 3744: 2010, referred to 10 m distance from the unit.
(10) Cooling version BT: outdoor air temperature 35 ° C, internal exchanger water temperature = -3 / -8 ° C. Fluid treated with 35% ethylene glycol.
(11) Weight referred to the standard version without hydronic kit and possible accessories.
N.B. The performance data are indicative and could be subject to change. In addition, the performances declared in apex (1), (2), and (8) refer to the instantaneous power according to EN 14511. The declared data stated in the apex (6) is determined according to the UNI EN 14825.

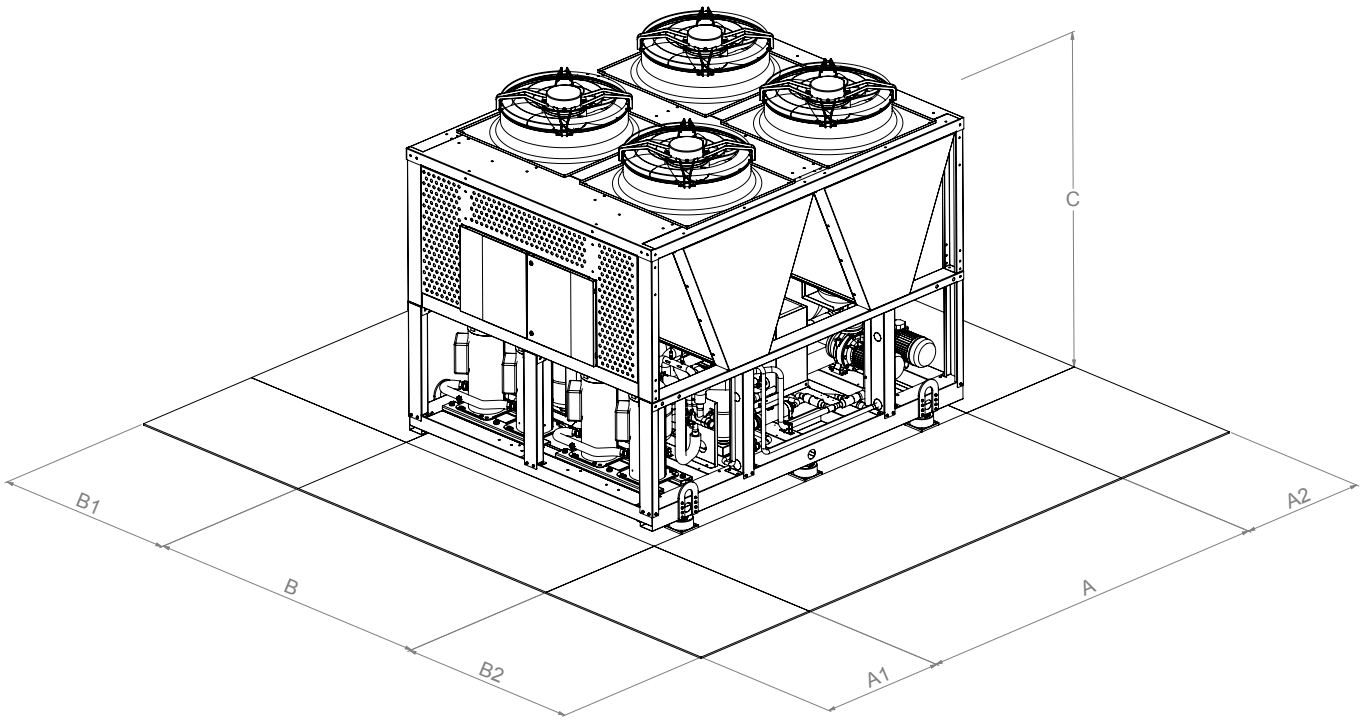

Model	Size			Clearance recommended access				Heat exchanger	
	A [mm]	B [mm]	C [mm]	A1[mm]	A2 [mm]	B1 [mm]	B2 [mm]	Type	Ø
02109	2860	1100	2350	1000	800	1000	1000	Victaulic	DN65 (2" 1/2)
02121	2860	1100	2350	1000	800	1000	1000	Victaulic	DN65 (2" 1/2)
02142	4060	1100	2350	1000	800	1000	1000	Victaulic	DN65 (2" 1/2)
02148	4060	1100	2350	1000	800	1000	1000	Victaulic	DN65 (2" 1/2)
02160	4060	1100	2350	1000	800	1000	1000	Victaulic	DN65 (2" 1/2)
04176	2860	2200	2350	1000	800	1000	1000	Victaulic	DN80 (3")
04199	2860	2200	2350	1000	800	1000	1000	Victaulic	DN80 (3")
04215	2860	2200	2350	1000	800	1000	1000	Victaulic	DN80 (3")
04237	2860	2200	2350	1000	800	1000	1000	Victaulic	DN80 (3")
04273	4060	2200	2350	1000	800	1000	1000	Victaulic	DN80 (3")
04304	4060	2200	2350	1000	800	1000	1000	Victaulic	DN80 (3")
04345	4060	2200	2350	1000	800	1000	1000	Victaulic	DN80 (3")

* Depends on the hydronic version - check the technical bulletin